# EXGO!

## FEATURES

- CONTINUOUS DUTY
- COMPACT AND STURDY DESIGN
- EASY TO INSTALL
- BUILT-IN BYPASS
- THERMAL PROTECTION
- REDUCED NOISE LEVEL
- SELF-PRIMING

The PIUSI EX GO! is a compact and sturdy ATEX vane pump; expressly engineered to work safely in potentially explosives atmosphere.
As the name says, this continuous duty DC pump is easy to place thanks to the small sizes and represents the ideal solution for small mobile tanks thanks to the remote control (on/off switch) and long cables (5mt EXGO! Switch - 3mt EXGO! without Switch). It can be used to dispense several fluids:
Gasoline and E15, Diesel, Paraffinic Biodiesel.
It is equipped with built-in bypass valve and a thermal protected motor.

### PERFORMANCE

| | |
|---|---|
| UP TO 32 L/MIN<br>FLOW RATE | MAX 1,2 BAR<br>OPERATING PRESSURE |
| DC 12V VOLTAGE<br>POWER | CONTINUOUS DUTY |

EXGO!

EXGO! BATTERY KIT

Atex
II 2 G

OUR PUMPS COMPLIES WITH THE FOLLOWING MARKING ATEX/IECEx

| II | 2 | G | Ex | d (EX50) | db (EX75) | IIA (EX50) | IIB (EX75) | T4 | Gb |
|---|---|---|---|---|---|---|---|---|---|
| GROUP | CATEGORY | TYPE OF EXPLOSIVE ATMOSPHERE | PERMANENT PREFIX | PROTECTION METHOD | | GAS GLASS | | TEMPERATURE CLASS | EQUIPMENT PROTECTION LEVEL |

### PACKAGING

| CODE | WEIGHT | | PACKAGING | | | N. BOX / EUROPALLET | |
|---|---|---|---|---|---|---|---|
| | KG | LBS | MM | INCH | PCS/BOX | ✈ | 🚢 |
| F00381020 | 5,43 | 12 | 280X160X140 | - | 1 | - | - |
| F00381500 | 5,43 | 12 | 280X160X140 | - | 1 | - | - |
| F00225X00 | 9,8 | 21,6 | 350X350X180 | - | 1 | H | |

ANY BIODIESEL · AIR · ANTIFREEZE · AdBlue® · BIODIESEL · DIESEL · FOOD · GASOLINE · GREASE · KEROSENE · OIL · WATER · WINDSCREEN

## CHART

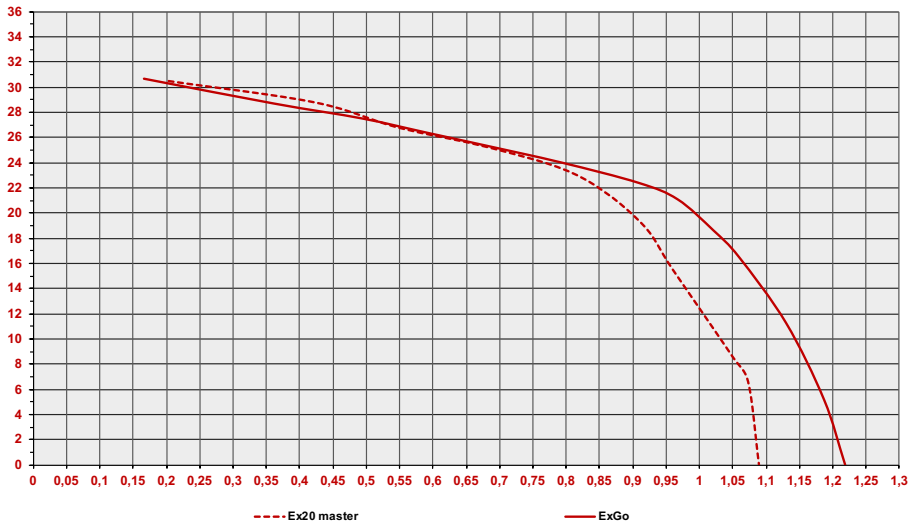


## IN THE BOX

- EXGO! PUMP/EXGO BATTERY KIT
- DELIVERY HOSE 2,5 MT (ONLY EXGO BATTERY KIT)
- SELF2000 NOZZLE (ONLY EXGO BATTERY KIT)
- INSTRUCTION MANUAL

## DETAILS

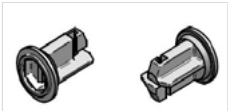
BUILT- IN BY-PASS VALVE

SWITCH ON/OFF

ELECTRIC CABLE WITH CLAMPS

SELF 2000 NOZZLE WITH DELIVERY HOSE 2,5M ONLY EXGO BATTERY KIT

## DIMENSIONS

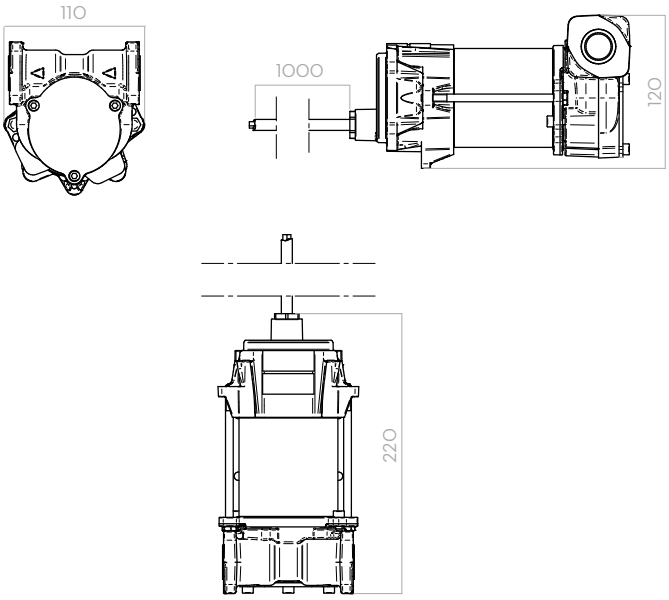


*Dimensions expressed in millimeters*

## MATERIALS

- BODY: CAST IRON
- ROTOR: SINTERED STEEL
- VANES: PPS
- SEAL: FKM
- SHAFT: STEEL

## TECHNICAL DATA

| CODE | DESCRIPTION | FLUIDS TYPE | FLOWRATE | | VOLTAGE | | | FUSIBLES | DUTY CYCLE | NOZZLE | RPM | HOSE | | IN | OUT | CHECK FILTER |
|---|---|---|---|---|---|---|---|---|---|---|---|---|---|---|---|---|
| | | | L/MIN | GPM | DC VOLT | POWER WATT | AMP. MAX. | AMPERE | MINUTE | | | LENGT. | Ø | BSP | | |
| F00381020 | EXGO! 12V DC ATEX | B D G K | 32 | 8,5 | 12 | 108 | 9A | 25A | CONTINUOUS | - | 1400 | - | - | 3/4" | 3/4" | - |
| F00381500 | (EX) EX20 12V DC (W/O SWITCH) | B D G K | 32 | 8,5 | 12 | 108 | 9A | 25A | CONTINUOUS | - | 1400 | - | - | 3/4" | 3/4" | - |
| F00225X00 | EXGO BATTERY KIT | B D G K | 32 | 8,5 | 12 | 108 | 9A | 25A | CONTINUOUS | SELF 2000 | 1400 | 2,5M | 3/4" | 3/4" | 3/4" | SI |